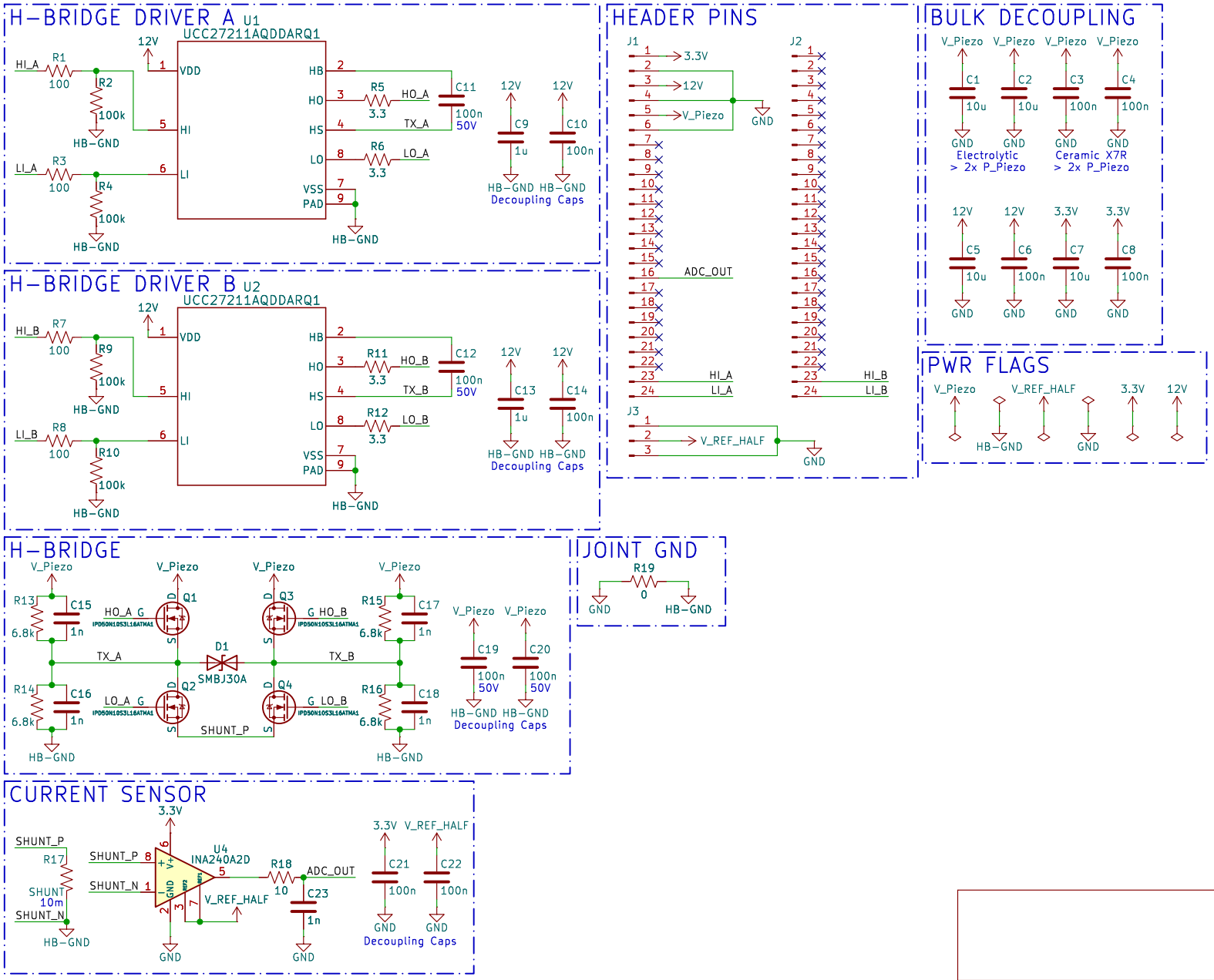


Sheet: /
File: TX.kicad_sch

**Title:**

| Size: A4 | Date: | Rev: |
|---|---|---|
| KiCad E.D.A. 9.0.6 | | Id: 1/1 |